Hyundai Kona: Dual Clutch Transmission Control System / Gear Actuator Assembly Schematic diagrams

Circuit Diagram

transmissionmanuals.com

[Circuit Diagram]

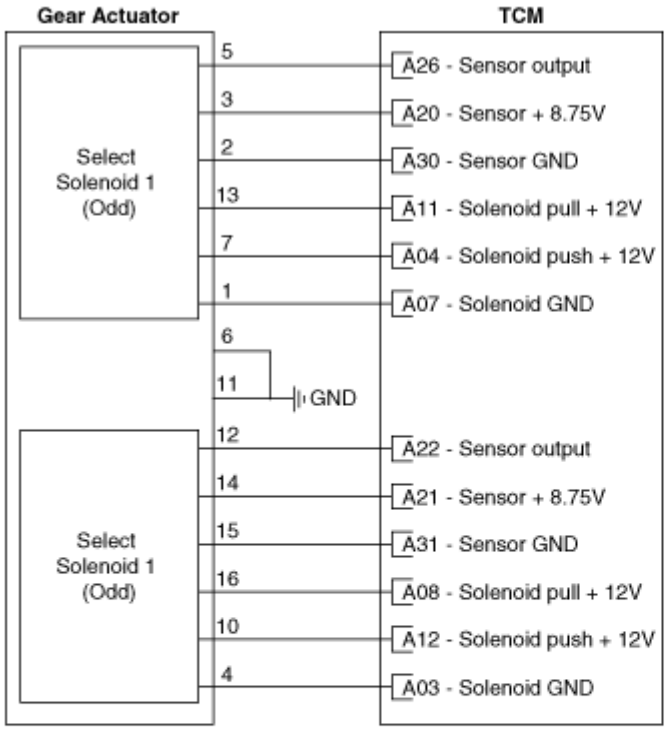

[Connection Information]

Terminal	Connected to	Function
1	TCM(A07)	GND (Select 1)
2	TCM(A30)	Position GND (Select 1)
3	TCM(A20)	Position supply (Select 1)
4	TCM(A03)	GND (Select 2)
5	TCM(A26)	Position signal (Select 1)
6	-	GND
7	TCM(A04)	Push (Select 1)
8	-	-
9	-	-
10	TCM(A12)	Push (Select 2)
11	-	GND
12	TCM(A22)	Position signal (Select 2)
13	TCM(A11)	Pull (Select 1)
14	TCM(A21)	Position supply (Select 2)
15	TCM(A31)	Position GND (Select 2)
16	TCM(A08)	Pull (Select 2)

[Harness Connector]

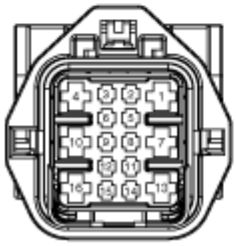

C541
Gear Actuator Connector

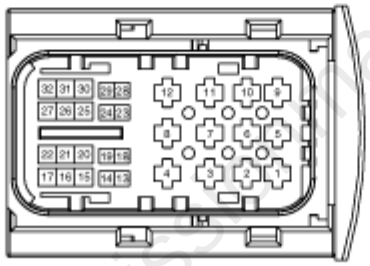

Connector [A]
TCM

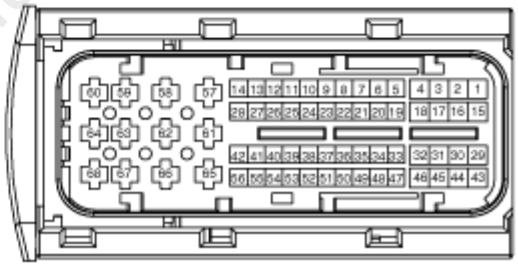

Connector [B]
TCM

transmissionmanuals.com

[Circuit Diagram]

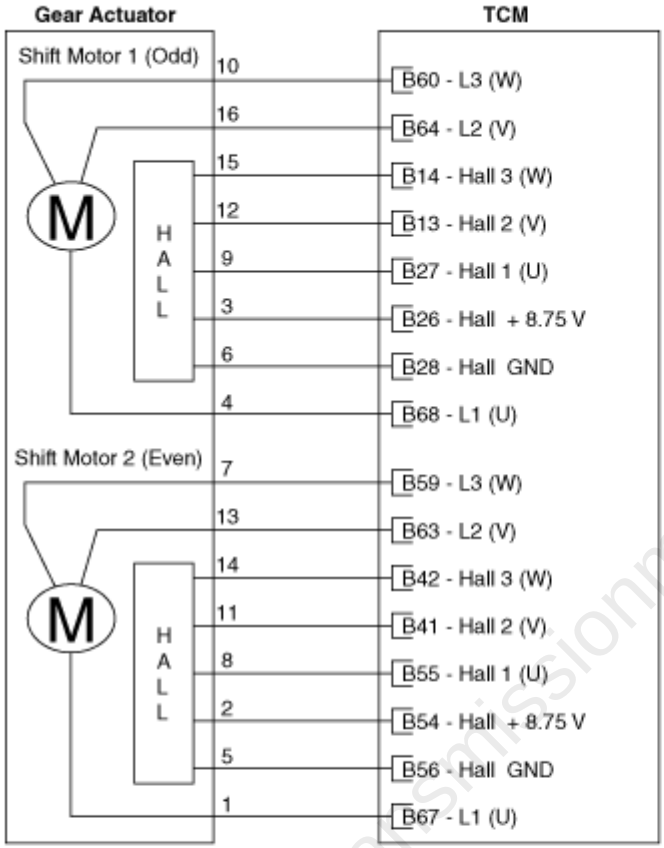

[Connection Information]

Terminal	Connected to	Function
1	TCM(B67)	Phase "U" (Shift 2)
2	TCM(B54)	Hall supply (Shift 2)
3	TCM(B26)	Hall supply (Shift 1)
4	TCM(B68)	Phase "U" (Shift 1)
5	TCM(B56)	Hall GND (Shift 2)
6	TCM(B28)	Hall GND (Shift 1)
7	TCM(B59)	Phase "W" (Shift 2)
8	TCM(B55)	Hall 1 (Shift 2)
9	TCM(B27)	Hall 1 (Shift 1)
10	TCM(B60)	Phase "W" (Shift 1)
11	TCM(B41)	Hall 2 (Shift 2)
12	TCM(B13)	Hall 2 (Shift 1)
13	TCM(B63)	Phase "V" (Shift 2)
14	TCM(B42)	Hall 3 (Shift 2)
15	TCM(B14)	Hall 3 (Shift 1)
16	TCM(B64)	Phase "V" (Shift 1)

[Harness Connector]

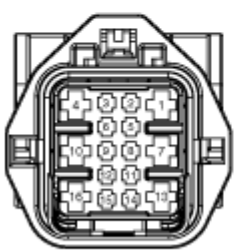

C541
Gear Actuator Connector

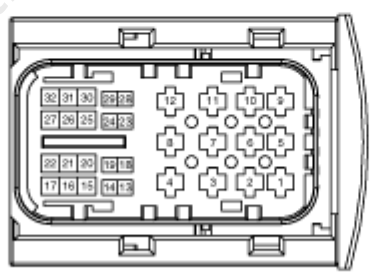

Connector [A]
TCM

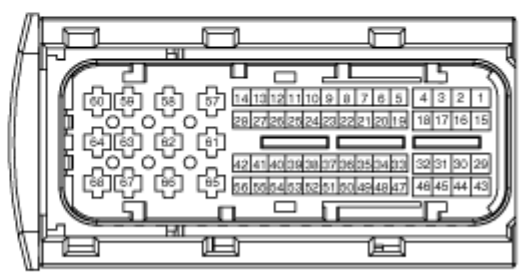

Connector [B]
TCM

transmissionmanuals.com